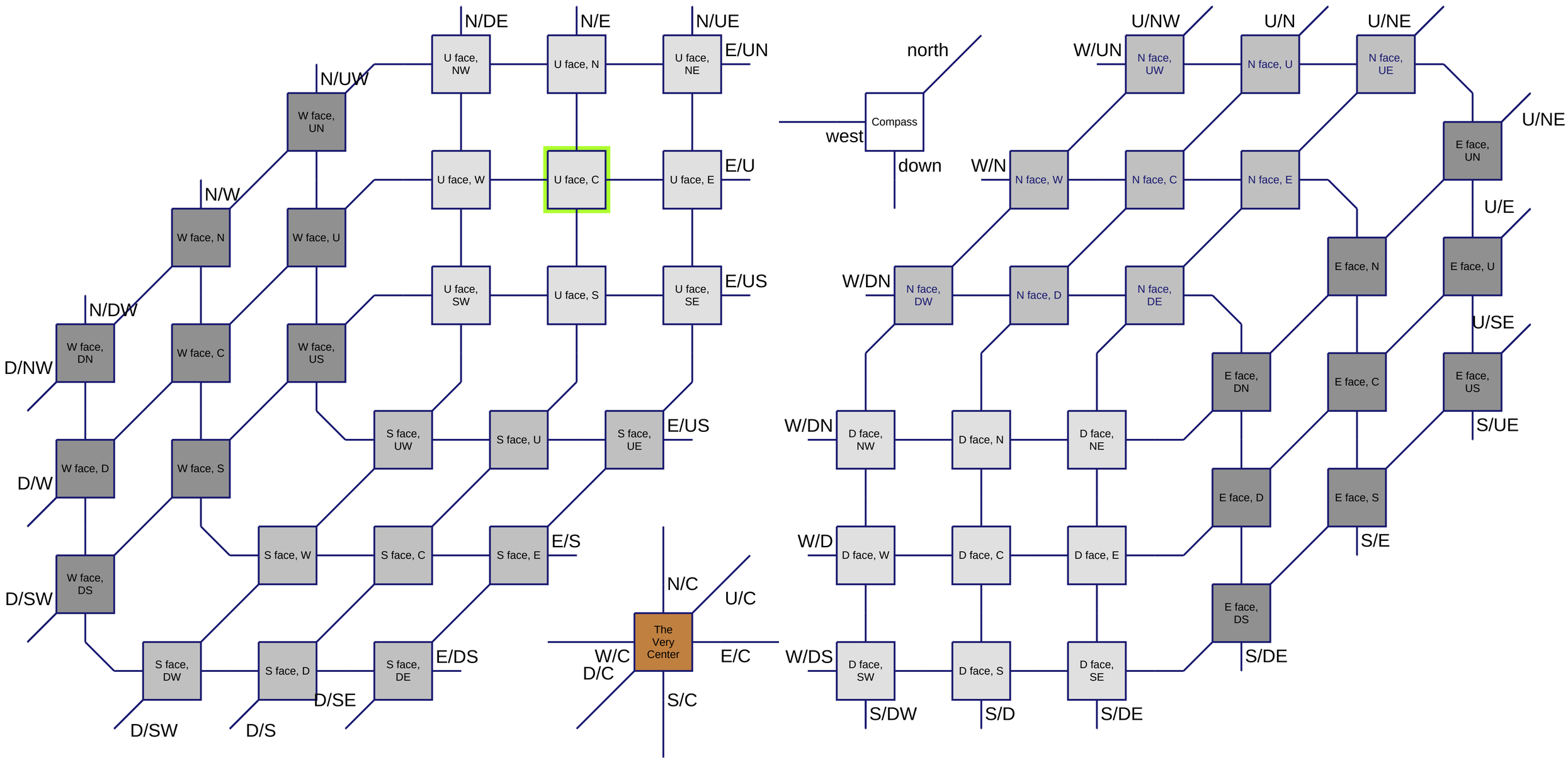Map for The Cube in the Cavern